STUDIES ON MODELING AND MAPPING USING DEEP LEARNING IN THE ROOT GROWTH OF CULTIVARS

Ademir Xavier de Souza[1], Cacilda de Jesus Ribeiro[2] and Wesley Pacheco Calixto[3]

ABSTRACT

Advanced technologies in precision agriculture are applied in the study of root architecture, optimizing growth, productivity and promoting a more sustainable, efficient and regenerative agriculture of the soil. In this sense, the objective of this work is to present a literature review analyzing the use of artificial intelligence in the context of precision agriculture on modeling and root mapping of cultivars with the aid of neural networks. This approach is justified as these tools become able to adapt to changes in soil and plant conditions, learning from mistakes and continuously improving themselves, making decisions about the application of inputs and adjustments to agricultural management, construction and maintenance of databases, identifying challenges and possible improvements in the model based on the root architecture of the plant. The results show savings in research time, elimination of noise and errors, detection of images hitherto invisible and no human interference in the design of the architecture, calibration in monitoring and adjustment of humidity. Thus, it is concluded the importance of researching and analyzing different sample sizes and exploring less costly and more ingenious laboratory and field methods in root phenotyping.

Keywords: Deep learning, Mapping, Modeling, Rizotron, Root system.

INTRODUCTION

Contemporary society is made up of individuals integrated into the social means of production. The traditionalism of the past must be overcome by actions and expressions that promote and perpetuate the environment, meeting social demands such as food, energy, water, soil, crops, technologies, among others, explored with precision [1]. Nature, in general, works as a maintainer of the resources necessary for the survival and existence of any form of life on the planet. This symbiotic relationship excludes from behavioral responsibility any form of life, with the exception of man, protagonist, transformer, rational,

[1]Doctorate student in Electrical and Computer Engineering (UFG)
Master in Physics Teaching (UFCAT)
[2]Dr. in Electrical Engineering (USP)
Full Professor at the Federal University of Goiás
[3]Dr. in Electrical Engineering (UFU)
Professor at the Federal Institute of Goiás/Campus Inhumas

capable of promoting deep reflections on the means of exploitation of natural systems, anchored in sustainability, productivity, efficiency and precision in his exploratory actions. These actions are based on philosophical, scientific, and technological thinking from other sciences, among which the logic that has existed for decades of centuries stands out [2].

Agriculture, for example, is an activity necessary for human survival that ultimately must be less invasive and more regenerative with the natural environment. In the view of [1] and [2], technologies for mapping and image processing using artificial intelligence, such as neural networks, are contributing and allowing us to know, qualitatively, the dynamics of the roots, their variations in soil resistivity, whether in the laboratory or in field conditions. The neural network allows the analysis of complex situations involving multiple variables, being able to adapt to changes, learn from mistakes, make decisions, continuously improve, facing situations that need answers and solutions, especially about the architecture of the root system.

OBJECTIVE

The objective of this work is to present a literature review analyzing the use of artificial intelligence in the context of precision agriculture on modeling and root mapping of cultivars with the aid of neural networks, showing that advanced technologies in precision agriculture are applied in the study of root architecture optimizing growth, productivity and promoting a more sustainable agriculture, efficient and regenerative soil.

METHODOLOGY

The research was based on a literature review that framed the theoretical framework and structured the concepts to support it. The literature used made use of analysis of works already published in the form of books, articles, theses and dissertations, all relevant to the theme presented, selecting primary studies and searching databases.

DEVELOPMENT

ARTIFICIAL INTELLIGENCE

This study presents a bibliographic research on the use of computer programs that require machines to perform cognitive tasks, which are normally performed by humans [3].

An AI system must be able to perform three tasks [2]:

a. storing knowledge;
b. apply stored knowledge to solve problems; and;
c. Acquire new knowledge through experience.

AI can be divided into layers, and in this way the concepts of Machine Learning and Deep Learning are introduced. Machine Learning, as its name suggests, is the process of continuous machine learning. The test consists of providing input data and, with learning acquired by them, elaborate outputs that satisfy the problem situation [4].

A follow-up to Machine Learning is Deep Learning that enables the machine to perform more complex tasks, such as speech recognition, image identification, and making predictions. Deep Learning establishes basic parameters on this data and trains the algorithm to learn how to use multiple layers of processing in pattern recognition [5]. It is about imitating human intuitive learning, where, with experience, one has the ability to perform a series of activities [6]. In this sense, in Deep Learning (Fig.1) [7] neural networks are more sophisticated, much larger in size and with a superior ability to extract and represent information.

Fig. 1. Illustration of the relationship between AI, Machine Learning and Deep Learning.

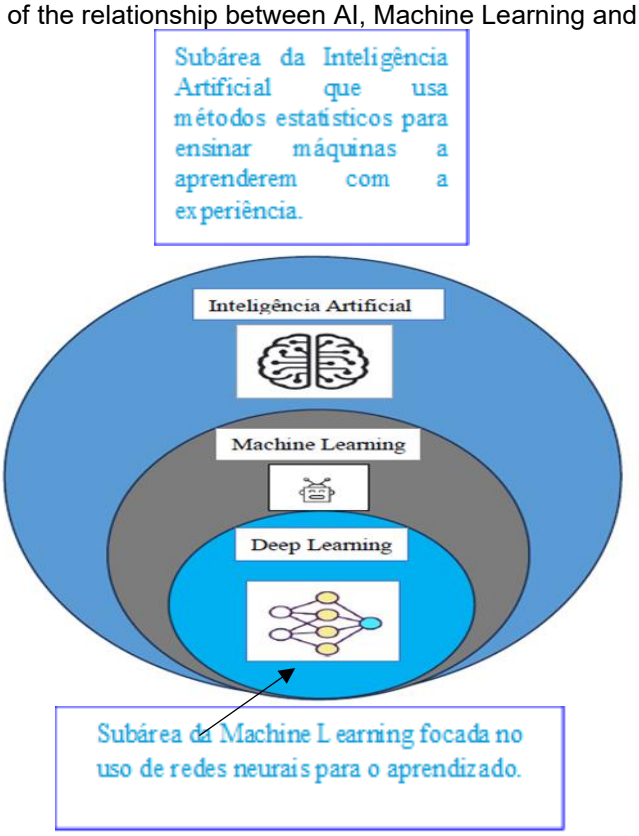

APPLICATIONS IN AGRICULTURE

There are actions aimed at precision agriculture such as management of collection, processing and analysis of temporal, spatial and individual data that, associated with other information, allow obtaining a support and management network in decision making,

estimating improvement in productivity in the use of resources, quality, profitability and sustainability [8].

With the advent of certain technologies, agriculture has become increasingly digital (Fig.2) [9], as the agricultural sector increasingly needs massive data collection to help in decision-making.

Fig. 2. Illustration of the stages of digital agriculture in the production chain in the pre-production, production and post-production phases.

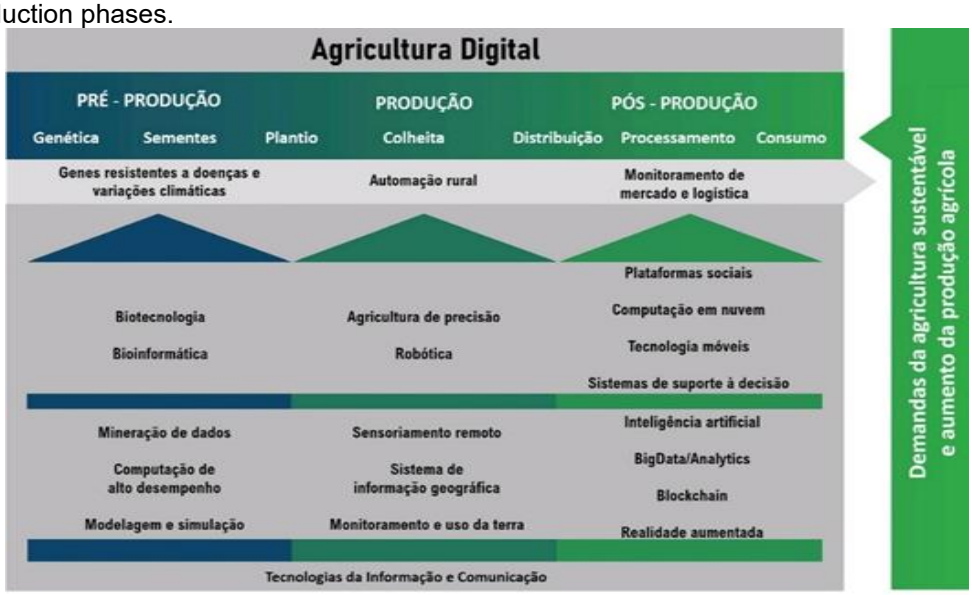

Embrapa proposes and participates in this new Digital Agriculture Innovation Ecosystem (Fig.3) [9], which is focused on the contribution of new disruptive technologies to adding value to production, increasing farmer profitability and food security.

Fig. 3. Illustration of the Digital Agriculture Innovation Ecosystem.

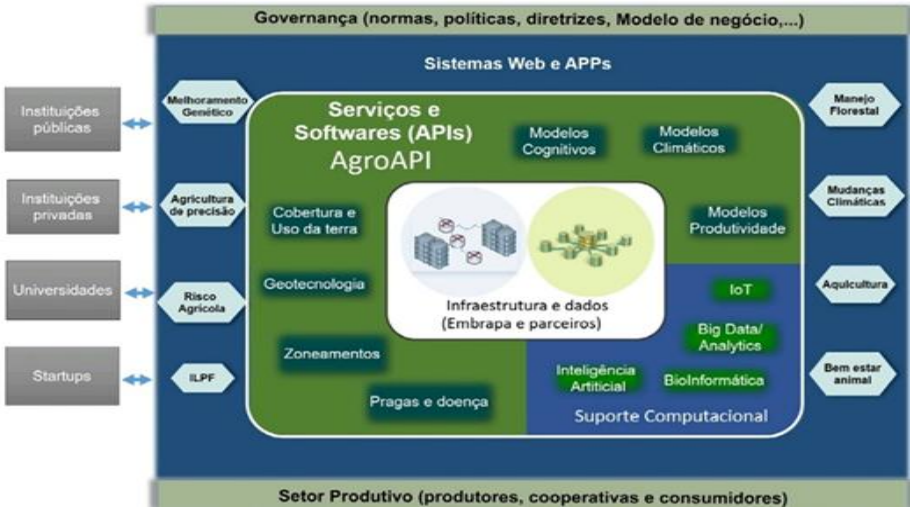

It is necessary to believe in a Second Green Revolution, a global initiative with a tripod in developing food production techniques, in soils with low fertility, in an efficient and

proficient way. An initiative of this magnitude must have frontier technological support (computer programs, artificial neural networks, sensors) for mapping soils and roots, as well as their chemical-physical and biological requirements and the engagement of the academic environment [10].

In (fig.4) [11] one has images of recent non-destructive technologies, such as X-ray computing and tomography, which are extremely expensive and therefore beyond the reach of common crop breeding programs.

Fig. 4. Computed tomography and magnetic resonance imaging of bean soil and roots in a rhizotron.

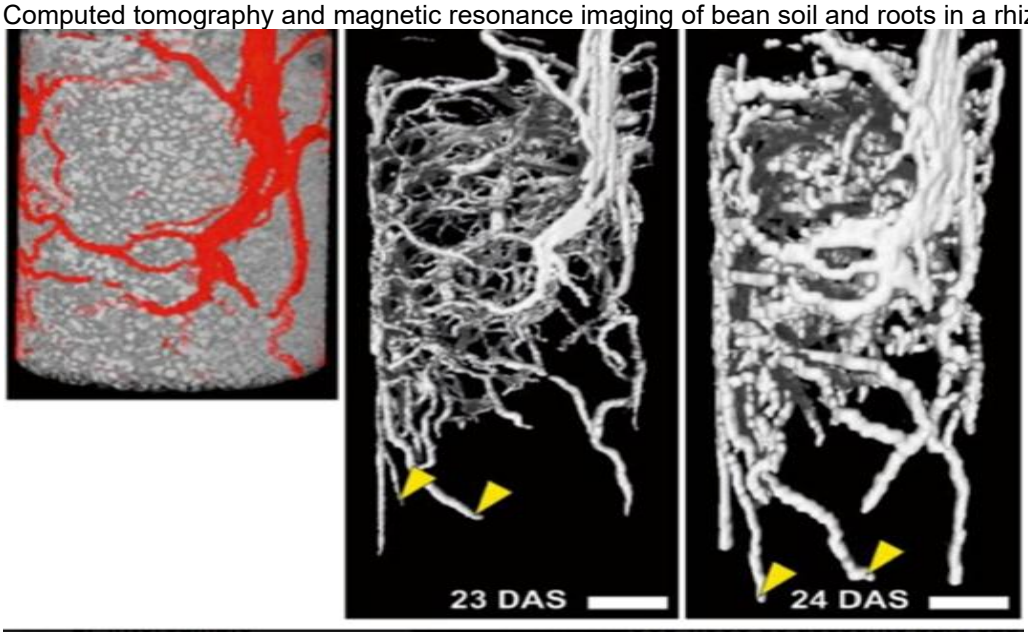

To overcome this problem by taking advantage of advances in deep learning (DL) image analysis in a sophisticated and fully autonomous approach, the Faster R-CNN (Convolutional Neural Network) network to identify and quantify anatomical parameters of the root solved this limitation [11].

A pre-trained Faster R-CNN model (Fig.5) [12] was trained in images of the rice root system. He was able to detect important cross-sectional images of the roots (stele and late metaxylem). The Faster R-CNN model was able to disseminate previously invisible images, this eliminated the need for manual interference in the root architecture design (RSA), saving time and eliminating noise and errors. It was compared the results of the Faster R-CNN network (an object detection model) with the results obtained using the Mask R-CNN network (an instance segmentation model) and showed that the Faster R-CNN model produces better results overall, given a small training set [12].

Fig. 5. R-CNN model architecture.

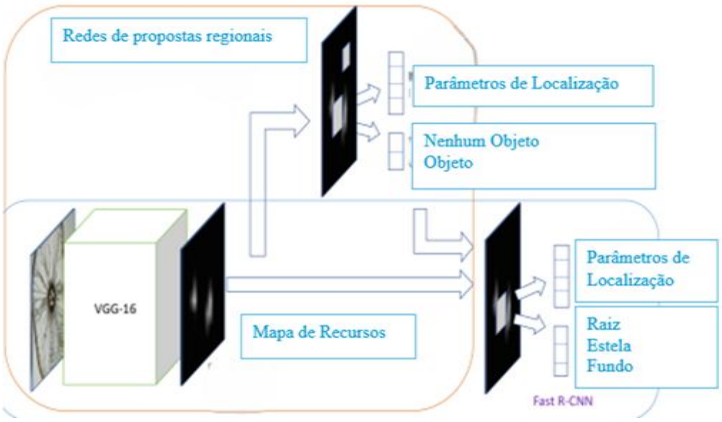

While the complexity of the environment becomes more relevant for field-scale production and physiological relevance with field methods, laboratory contolized methods are amenable to large-scale phenotyping and throughput; Therefore, researchers continue to explore ways to bridge the gap between laboratory and field methods [13]. The main impediment is the high labor and time costs in the field for phenotyping of root traits. The ability to study larger sample sizes will provide exciting opportunities to address the role of RSA (root system architecture) and its application in future research [14].

IMAGE ANALYSIS USING AI IN ROOT MAPPING

Several authors interested in RSA have commented that the largely invisible qualities of roots are a fertile but often overlooked research topic [15].

A strength of AI techniques is the ability to detect, classify, quantify, and predict a multitude of features and patterns of data in ways and quantities that are not possible by humans. In recent years, software such as RootPainter and RhizoVision Explorer have emerged as the preferred software for root measurements making use of non-destructive techniques for image acquisition without requiring plant roots to be removed from their growing environment [16].

There are several advantages to some non-destructive imaging techniques, such as the ability to conduct time-series (4D) analysis and observe growth habits without disturbing (or minimally disturbing) the plant. 2D or (2D + time series) methods, such as rhizotrons or mini-hizotrons, allow time series data to be collected, which allows incremental growth, growth habits, and other underground growth activities such as nodulation and mycorrhizal activity to be observed [17].

Although non-invasive, direct field 3D techniques such as ground-penetrating radar measurements of fine root materials and root hairs are not possible due to the technology's lack of resolution [13]. However, the use of other sensors such as electromagnetic

resistance, magnetic resonance imaging (MRI) [18], positron emission tomography (PET) [19], X-ray computed tomography (X-ray CT) [20], and neutron tomography (NT) [21] have been successful in greenhouse and laboratory settings. However, non-destructive methods fail to sample portions of a plant's root system due to the fine nature of some root material or root hairs, root water content, presence of background and ferromagnetic materials that interfere with scans, due to soil opacity or the limited area of soil and root interaction that are sampled [22].

Ground-penetrating radar or GPR is a geophysical method that employs electromagnetic waves to locate shallow geological structures and features, consisting of the emission and reception of electromagnetic waves reflected at the interfaces of the physical medium, producing as a result a high-resolution image of the subsurface [23]. The main factors that control the signal of the equipment are: the frequency and speed of the electromagnetic wave in the medium, the reflection coefficient (contrast of dielectric permittivity between the media) and the attenuation of the medium [24]. Thus, the choice of the GPR center frequency should always be preceded by the identification of the soil, since the amount of clay, salt content or water can directly influence the attenuation of the radar signal [25].

High-frequency antennas provide better results in dry and electrically resistive soils, so that the attenuation is proportional to the electrical conductivity of the medium, i.e., the higher the conductivity, the greater the attenuation of the electromagnetic wave [24].

Frequencies between 900 MHz and 1.5 MHz have been used for some shallow investigations and also in sandy soils. However, the antennas most used for ground investigations have a central frequency between 100 and 500 MHz, as they can reach a greater depth. For organic soils, responsible for a high attenuation of the electromagnetic signal, where great depths of investigation are required for research, low frequency antennas, between 70 and 200 MHz, are commonly used. Next, table I [25] shows the variation in physical properties of some soils as a function of their compositions.

Table I - Dielectric Constant Range, Electrical Conductivity and Magnetic Permeability

Tipo de Solo	K	μr	σ_0 (mS/m)
Solo arenoso	2,6	1	0,14
Solo arenoso	2,6	1	0,14
Saturado	2,4	1	6,9
Solo argiloso	15	1	0,27
Solo argiloso	15	1	0,27
Solo saturado	2,4	1	50
Raiz	3 - 5	1	<0,1

In the data acquisition, the GPR model SIR-000 (manufactured by Geophysical Survey Systems, Inc.) was used coupled to a pair of shielded antennas with a center frequency of 900 MHz and an odometer wheel (Fig.6) [23]. The data were acquired through the common distance technique, where a pair of antennas (one transmitting and one receiving) is moved at the same time along each profile, allowing a real-time visualization of the reflectors underground. Data were collected along 4 m profiles, equispaced by 5 cm, where the three species were in the center of an area of 16 m², for each of the surveys.

Fig. 6. Arrangement of the GPR System used in data acquisition.



After the acquisition stage, the data were processed in the ReflexW software, version 6.0 [26]. The steps of the processing routine were applied according to the characteristics of the data and depend, fundamentally, on the interpreter [27].

The use of electrical methods, such as electrical resistivity tomography (TRE) and mise-à-la-masse (MALM) in the monitoring of cultivar roots, in this case, came from Bordeaux/France (Fig.7). [28], occurred with the use of electric current applied to the ground, characterized by a non-invasive behavior, allowing images that otherwise could only be presented in geographically limited locations. MALM uses direct electric current

(DC), applied to the crop stem, obtaining images of the root system. In this way, ERT and MALM, together, provide complementary information on the structure and dynamics of the roots. The model used allowed us to know, qualitatively, variations in soil resistivity, showing promise at various scales, whether in the laboratory or under field conditions.

Fig. 7. Culture in May 2017. Being: (a) field site (b) plants investigated (c) grape condition during the experiment.



(a) (b) (c)

The MALM approach was logistically the same as the ERT approach and was supported by the same device, but used a pole-pole scheme (with two remote electrodes). The drilling and surface electrodes that make up the measurement setup were used as potential electrodes, while the C1 current electrode was planted directly on the stem, 10 cm from the soil surface, with an insertion depth of about 2 cm, to inject current directly into the cambium layer. The two remote electrodes C2 (for current) and P2 (for voltage) were placed at a distance of approximately 30 m from the graph, in opposite directions. Note that for MALM (unlike ERT) a corner surface electrode was placed near the rod to refine the information in the center of each rectangle.

Each MALM acquisition was accompanied by a complementary MALM acquisition, where the C1 current electrode was placed directly on the soil near the stem rather than on the stem itself. Thus, the effect of the stem-root system of the plant on current transmission can be directly evidenced by comparing the voltage standards resulting from the two MALM configurations. Next, (Fig. 8) [27] shows time-varying atmospheric conditions used for hydrological simulation.

Fig. 9. Schematic and photos of a completed FOS device.

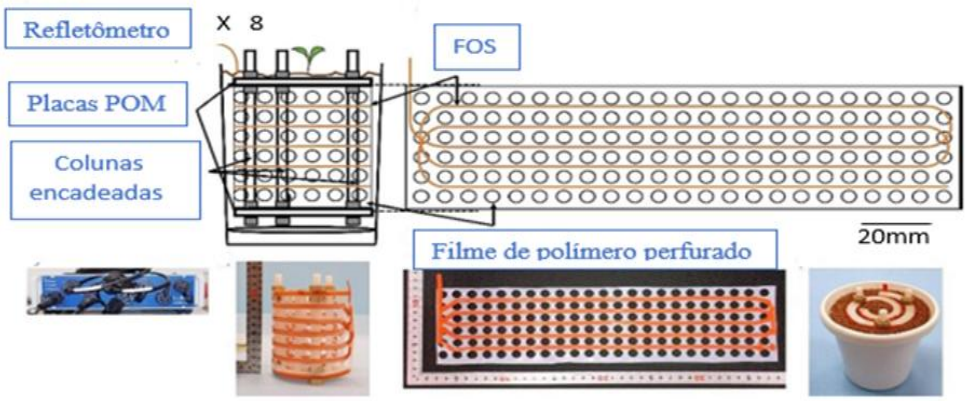

Some researchers [30] have sought to understand sorghum cultivation for its measurable characteristics under water stress by mapping the root structure and its water uptake patterns. The objective of this study was to compare the degree of water absorption correlated with root development and aerial structure of sorghum (Sorghum bicolor cv. Sucro 506) with those of maize (Zea mays cv. PR32F73). The system used twenty 1m³ Rizotrons, in which calibrated soil moisture probes were inserted, capable of monitoring and adjusting the moisture content at 25% and 12%, water stress. The sorghum crop maintained its physiological activity in contrast to the maize, i.e., the water use efficiency increased by 20% in the sorghum crop and reduced by 5% in the maize crop. Root length density and water absorption capacity were improved in sorghum crop. The positive adaptation of sorghum in relation to corn was due to the support of physiological activity and the increase of root structure, allowing better water absorption.

It is known that roots are key structures for the development of crops in general. Studying root structure from various aspects is challenging and costly [31]. The study used a compartmentalized Rizotron system, integrating conventional characteristics in the evaluation of root patterns at field and laboratory scale. The system segmented the soil moisture content through cylindrical compaction of the soil by means of the hydrophobic petrolatum film/paraffin, allowing a different arrangement in the root structure that favored the conservation of water by the shallow and deep roots in Rizotron. The system allowed to carry out a root phenotyping study in different and distinct portions of the soil. In such a way that [32] they discuss precision agriculture with the use of sensors that evaluate soil attributes, crop, and decision-making in agricultural management. This occurs with data storage, analysis, and transmission carried out by automated software. The result is better spatial and temporal management of the crop, obtaining maximum economic return and reducing environmental impact. In his doctoral thesis [33] he proposes a methodology to obtain the geoelectric stratification of the soil of multiple horizontally overlapping layers.

This stratification is optimized by an experimental apparent resistivity curve, obtained in the soil, compared with a theoretical resistivity curve, developed by an algorithm and illustrated in (Fig. 10) [33]. The positive aspect of this modeling (Fig.11) [33] is that it allows the stratification of the soil in several layers and on a large scale. The result of the modeling allowed the application of the method in precision agriculture, as the proposed method estimates the electrical conductivity of the soil layers and their respective depths.

Fig. 10. Apparent resistivity curves. (a) increasing (b) decreasing.

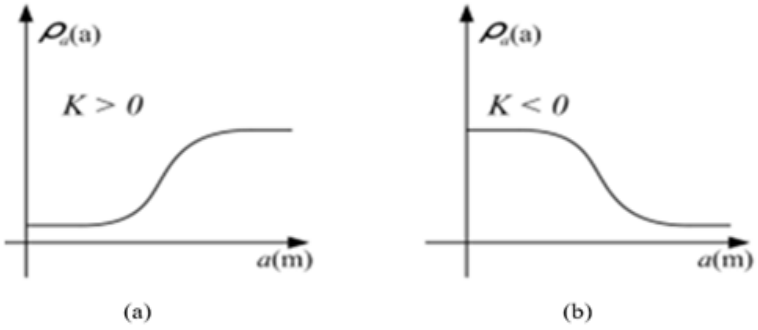

Fig. 11. Wenner's method. Being (q) electrode (I) electric current (P) electrode depth (a) spacing between the electrodes (V) ddp between the electrodes.

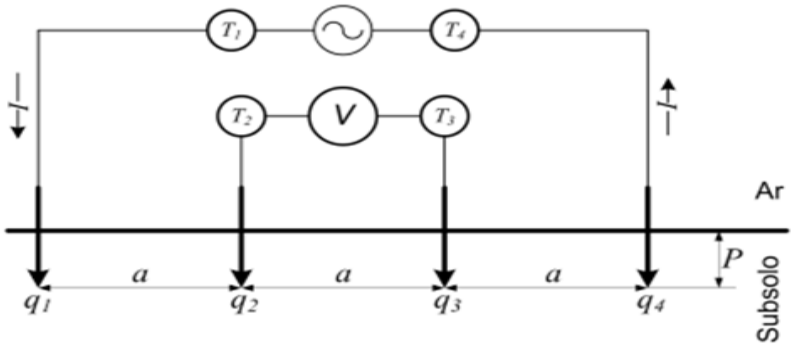

In his master's dissertation [34] he presents the study that relates the apparent electrical resistivity of the soil ρa, moisture content, clay, soil compaction, making ρa a tool for mapping the spatial variability of the soil. The ρa values are obtained by geoelectric prospecting that detects the effects of electric current on the ground (Fig.12) [34]. Data collection is done using the Wenner model and the Electric Walking technique (Fig.13) [34], allowing us to conclude the relevance of this technique for PA, representing a non-invasive, agile, economical method for large-scale use. In general, the different approaches, validated by computer software, sought to map the root system contemplating and parameterizing the aerial structure of the crops. However, the structure that must be considered is located underground, the roots. The gap identified lies in the lack of studies of the root system in food production, cost relief and sustainability of natural systems. In this

study, artificial intelligence is used through the neural network applied to the processing of information about the root structure of cultivars, aiming to understand the need for this system regarding the physicochemical properties for its better development in space and time, from the point of view of greater productivity, more economy and sustainability. The neural network will allow the analysis of complex situations involving multiple variables, being able to adapt to changes, learn from mistakes, make decisions, continuously improve, facing situations that need answers and solutions, especially about the root structure.

Fig. 12. Illustration of the path of electric current on the ground.

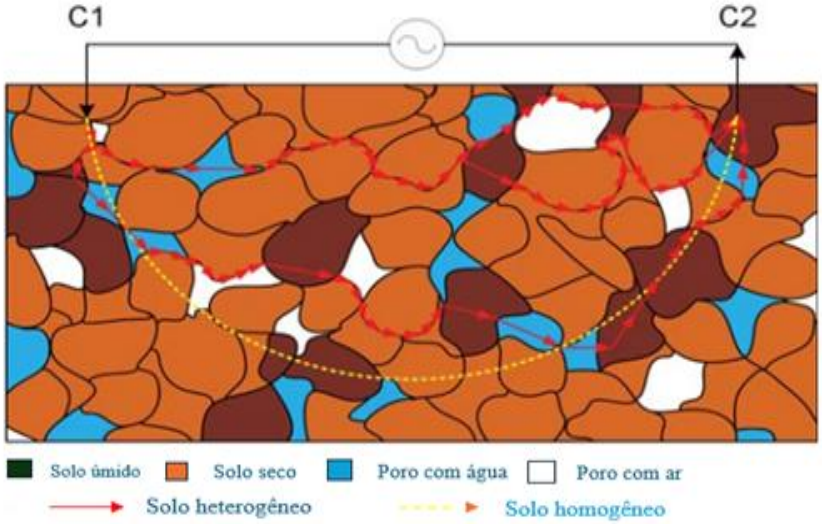

Fig. 13. Illustration of the method with Electric Walking.

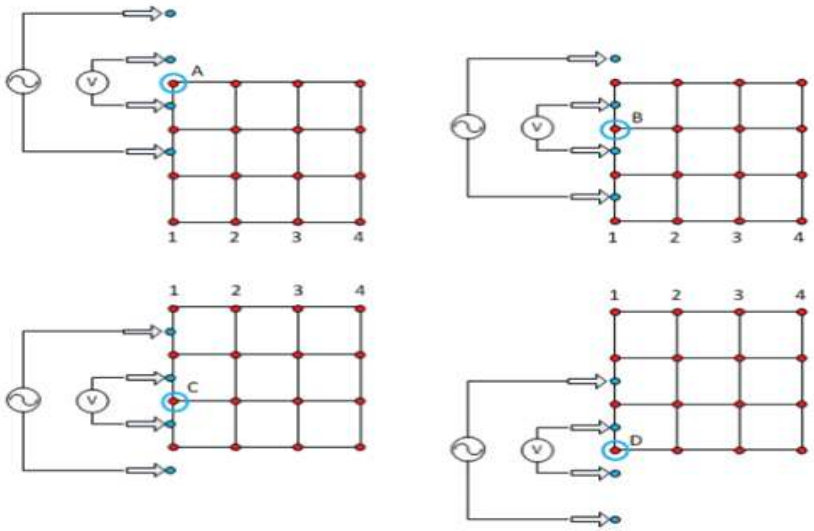

This method was proposed by F. Wenner, where electric current I is injected at the T1 terminal and collected at the T4 terminal. This current, passing through the ground between points q1 and q4, produces potential at points q2 and q3. The potentials at these

points can be found in (1) [34]. Thus, from (Fig.14) [34], which illustrates the image of points q1 and q4, one can calculate the potentials at points q2 and q3, given by (1) [34].

$V_p = (\ ) + (\ )$ (1) $\frac{\rho I}{4\pi}\frac{1}{r_1 q}\frac{1}{r^{1\prime} q}$

Fig. 14. Illustration of the Wenner Arrangement.

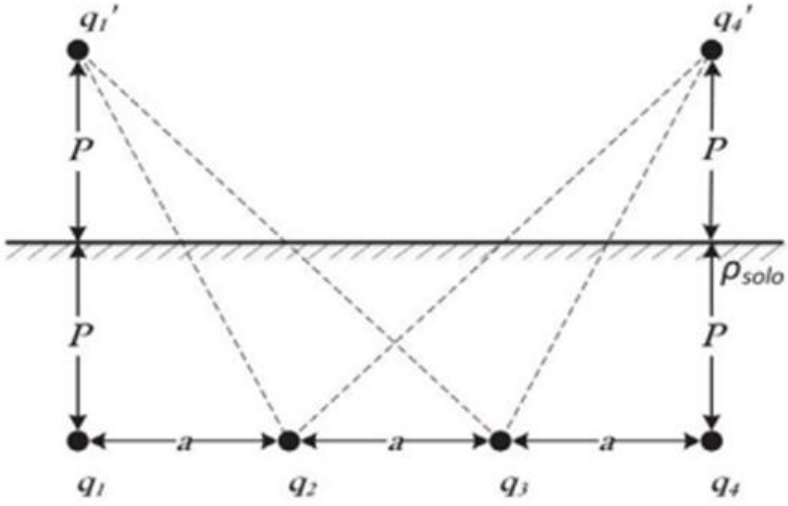

And finally, the electrical resistivity of the soil ρa [Ωm] is given by (2) [34].

Rm = = [+ -] (2) $\frac{V_{23}}{I}\frac{\rho}{4\pi}\frac{1}{a}\frac{2}{\sqrt{a^2+(2p)^2}}\frac{2}{\sqrt{(2a)^2+(2p)^2}}$

FINAL CONSIDERATIONS

The proposed studies allowed to perform an analysis of root phenotyping in different and distinct portions of the soil and to compare the degree of root architecture of the plants, correlating them with the absorption of water and other nutrients stimulated by their biochemical functions. The research also obtained more detailed images of fine parts of the roots, avoiding human interference to complete this information manually, reducing the possibility of gross errors. These approaches solidify the use of computer programs as tools that become capable of adapting to changes in soil and plant conditions, learning from mistakes and continuously improving themselves, making decisions about the application of inputs and adjustments to agricultural management, construction and maintenance of databases, identifying challenges and possible improvements in the model based on the root architecture of the plant. The results show savings in research time, elimination of noise and errors, detection of images hitherto invisible and non-human interference in the design of the architecture, calibration in the monitoring and adjustment of humidity and

water deficit. Thus, it is concluded the importance of researching and analyzing different sample sizes and exploring less costly and more ingenious laboratory and field methods in root phenotyping.

CONCLUSIONS

The federal government, through Embrapa, proposes an innovation in digital agriculture with a core focus on increasing production, profitability and food security. Convolutional Neural Network (R-CNN) has been used to identify anatomical parameters of rice root, revealing previously unknown images. Faster R-CNN (network model for root cross-section detection) was compared with Mask R-CNN (network model for instance segmentation) and the former, overall, produced better results. The use of ground penetrating radar (GPR) produces images of the subsurface and the best results have been shown for dry and electrically resistive soils requiring prior knowledge of its composition and physical properties. The electrical method, such as electrical resistivity tomography (ERT) and mise-à-la-masse (MALM) use of electric current applied to the soil, together, showed promise at various scales, either in the laboratory or in field conditions for recognition of the structure and dynamics of the roots. The FOS (device coupled to a fiber optic sensor) monitors in real time the development of the roots and has proven to be superior to other underground techniques, resulting in a better spatial and temporal management of the cultivar, obtaining maximum economic return and reducing the environmental impact. Geoelectric prospecting that detects the effects of electric current on the ground using the Wenner model and the Electric Walking technique represent a non-invasive, agile, economical method for large-scale use in PA. In general, the different approaches, validated by computer software, sought to map the root system contemplating and parameterizing the structure located underground to the detriment of the aerial part.

REFERENCES

1. GALVÃO, T. A. et al. Conceituação e estudo de normas. Brasília: CAT/SEDH/PR, 2009. p. 13-39.

2. FRANCO, C. R. Inteligência Artificial. Londrina: Editora e Distribuidora Educacional, 2021.

3. HAYKIN, S. Neural Networks: A Comprehensive Foundation. Prentice Hall, 2008.

4. SHARMA, N. et al. Machine Learning and Deep Learning Applications-A Vision. Global Transitions Proceedings, v. 2, n. 1, p. 24-28, 2021.

5. MANCO, L. et al. Basics of machine learning and deep learning in imaging for medical physicists. Physica Medica, v. 83, p. 194-205, 1 mar. 2021.

6. DEBONA, D. G. et al. Sensory analysis and mid-infrared spectroscopy for discriminating roasted specialty coffees. Coffee Science, v. 16, 2021.

7. BOT, J. L. et al. DART: software to analyse root system architecture and development from captured images. Plant Soil, p. 261-273. DOI: 10.1007/s11104-009-0005-2.

8. SANTOS, J. B. et al. Caracterização e classificação de solos urbanos em Campina Grande do Sul, Estado do Paraná. Revista de Ciências Agrárias, Lisboa, v. 55, n. 2, p. 98-104, 2012.

9. EMBRAPA. Agricultura Digital: pesquisa, desenvolvimento e inovação nas cadeias produtivas. Brasília, 2020.

10. LYNCH, J. P. Roots of the second green revolution. Australian Journal of Botany, Pennsylvania, v. 55, n. 14, p. 493-512, 2007.

11. METZNER, R. et al. Direct comparison of MRI and X-ray CT technologies for 3D imaging of root systems in soil: potential and challenges for root trait quantification. Plant Methods, Jülich, 2015. DOI: https://doi.org/10.1186/s13007-015-0060-z.

12. LYNCH, J. Root architecture and plant productivity. Plant Physiol., 1995, p. 7-13.

13. ZHANG, Z. et al. Advances in root system architecture: Functionality, plasticity, and research methods. J Resour Ecol., 2022, p. 15-24.

14. TOTZKE, C. et al. Capturing 3D water flow in rooted soil by ultra-fast neutron tomography. Sci Rep., 2017.

15. UGA, Y. et al. Challenges to design-oriented breeding of root system architecture adapted to climate change. Breed Sci., 2021, p. 3-12.

16. SEETHEPALLI, A. et al. RhizoVision Explorer: Open-source software for root image analysis and measurement standardization. AoB Plants, 2021.

17. SEETHEPALLI, A. et al. An integrated hardware and software platform for root crown phenotyping. Plant Phenomics, 2020.

18. ZHANG, Z. et al. Advances in root system architecture: Functionality, plasticity, and research methods. J Resour Ecol., 2022, p. 15-24.
19. METZNER, R. et al. Direct comparison of MRI and X-ray CT technologies for 3D imaging of root systems in soil: potential and challenges for root trait quantification. Plant Methods, 2015.

20. WASSON, A. P. et al. Noninvasive root and rhizosphere phenotyping. Trends Plant Sci., 2020, p. 119-120.

21. FALK, R. et al. Computer vision and machine learning enabled soybean root phenotyping pipeline. Plant Methods, Ames, 2020. DOI: https://doi.org/10.1186/s13007-019-0550-5.

22. HUANG, Z. et al. Automatic segmentation of cotton roots in high-resolution minirhizotron images based on improved OCRNet. Frontiers in Plant Science, Agricultural Research Service (USDA), United States, 2023. DOI: https://doi.org/10.3389/fpls.2023.1147034.

23. ROCHA, G. et al. GPR 3D como método não invasivo para estudo do crescimento e biomassa de raízes de árvores de florestas tropicais. V Simpósio Brasileiro de Geofísica, 2012.

24. ANNAN, A. P. Ground penetration radar workshop notes. Sensors Software, Inc., Internal Report, 1992. 130 p.

25. DOOLITTLE, J. A. et al. Ground Penetrating Radar: Theory and applications. Chapter 6: Soils, peatlands, and biomonitoring. In: JOL, H. M. (Ed.). Elsevier Science, 2009.

26. SANDMEIER, K. J. REFLEXW, Version 6.0. WindowsTM 9x/NT/2000/XP/7 – program for the processing of seismic, acoustic or electromagnetic reflection, refraction and transmission data. Manual. 516 p., 2011.

27. BORGES, W. R. et al. Aplicação da Geofísica Forense na Busca de Vestígios de Pessoas Desaparecidas na Guerrilha do Araguaia. In: IV Simpósio Brasileiro de Geofísica, Brasília-DF, 2010.

28. MARY, B. et al. Time-lapse monitoring of root water uptake using electrical resistivity tomography and mise-à-la-masse: a vineyard infiltration experiment. Soil, 2020, p. 95-114.

29. TEI, M. et al. Non-destructive real-time monitoring of underground root development with distributed fiber optic sensing. Plant Methods, 2024.

30. ZEGADA, L.; LIZARAZU, L. et al. Water uptake efficiency and above-and belowground biomass development of sweet sorghum and maize under different water regimes. Plant and Soil, p. 47-60, 2012.

31. SARTONI, R. et al. A new compartmentalised rhizotron system for root phenotyping. Italian Journal of Agronomy, p. 53-58, 2015.

32. BASSOI, L. H.; INAMASU, R. Y. Agricultura de precisão e agricultura digital. 2019.

33. CALIXTO, W. P. et al. Métodos matemático e computacional aplicados a prospecção geoelétrica com estratificação tridimensional. 2012.

34. SILVA, A. M. Metodologia para correlacionar a umidade, compactação e a condutividade elétrica aparente do solo. 2014.