LUMEN ET VIRTUS

Design of a device for lifting a Grand Piano

https://doi.org/10.56238/levv15n39-170

Antonio Manoel Dias Henriques[1], Júlio Cesar Pesati Resende[2], Augusto Brignol Alves[3], Davi Arruda de Morais[4], Eden Jose da Rocha Jr.[5], Guilherme Pinheiro Tavares[6], Kelvin Rafael Paulino Buss[7], Leonardo Virginio de Assis Duarte[8], Marisa de Avila Rodríguez Vázquez[9], Felipe Alves Sforcini[10], Francisco Menezes Guimarães[11], Giovana Gonçalves Moreira[12], Leo Diniz Czarnewski[13], Luís Filipe Marques de Albuquerque[14].

[1] Doctor in Structures and Civil Construction
University of Brasília – UnB
Department of Mechanical Engineering
E-mail: henriques@unb.br
[2] Graduating in Mechanical Engineering
University of Brasília - UnB
Email: jjpresende@gmail.com
[3] Graduating in Mechanical Engineering
University of Brasília - UnB
E-mail: brignolaugusto@gmail.com
[4] Graduating in Mechanical Engineering
University of Brasília - UnB
Email: daviam2002@gmail.com
[5] Graduating in Mechanical Engineering
University of Brasília - UnB
E-mail: 200057472@aluno.unb.br
[6] Graduating in Mechanical Engineering
University of Brasília - UnB
E-mail: Guilhermepinheirotavares@gmail.com
[7] Graduating in Mechanical Engineering
University of Brasília - UnB
E-mail: kelvinpaulino014@gmail.com
[8] Graduating in Mechanical Engineering
University of Brasília - UnB
E-mail: leo159duarte@gmail.com
[9] Undergraduate student in Mechanical Engineering
University of Brasília - UnB
E-mail: marisadeavila@gmail.com
[10] Graduating in Mechanical Engineering
University of Brasília - UnB
E-mail: fsforcini@gmail.com
[11] Graduating in Mechanical Engineering
University of Brasília - UnB
E-mail: fmg.bsb@gmail.com
[12] Undergraduate student in Mechanical Engineering
University of Brasília - UnB
Email: gioninha23@gmail.com
[13] Graduating in Mechanical Engineering
University of Brasília - UnB
E-mail: leo.czarnewski@gmail.com
[14] Graduating in Mechanical Engineering
University of Brasília - UnB
E-mail: luis.pira01@gmail.com

ABSTRACT
This article describes the process of designing a device to vertically elevate a grand piano together with the pianist. A device for this purpose has already been developed and applied in performances by the Swiss pianist Alain Roche abroad. The idea, with this project, is to do the same in Brazil, particularly in Brasilia, with the possibility, if there is interest, of expanding to other states. As the pianos, in order to be played, are positioned horizontally, it was necessary to adapt the action mechanism so that the piano could be played vertically. The project was developed within the scope of the discipline Project of Mechanical Systems of the Department of Mechanical Engineering of the University of Brasília – UnB and had the participation of thirteen students under the coordination of the professor of the discipline. Two types of devices have been developed, one that suits a particular grand piano that is being prepared for performances and another device that fits any grand piano, regardless of dimensions. The designed devices allow the pianist to be elevated vertically along with the piano comfortably and safely. Performances can be made outdoors or indoors that have the support of a lifting system to suspend the piano and the pianist. The project required an interdisciplinary approach, combining knowledge of mechanical engineering, ergonomics, music, safety and design, to ensure the technical and artistic feasibility of the device.

Keywords: Grand Piano, Lifting Device, Design, Art.

INTRODUCTION

The piano, an iconic instrument in the world of music, has a rich history and a fascinating structure that has captivated musicians and listeners over the centuries. Invented in the early eighteenth century by Bartolomeo Cristofori, an Italian harpsichord maker, the piano revolutionized Western music by introducing the ability to vary the intensity of the sound produced, a feature that was lacking in its predecessors, such as the harpsichord and the clavichord. This innovation was made possible by the key-operated hammer mechanism, which allows the pianist to control musical dynamics and expression with unprecedented precision. Figure 1 shows the piano invented by Bartolomeo Cristofori.

Figure 1: Piano inventado por Bartolomeo Cristofori



Fonte: https://pt.wikipedia.org/wiki/Fortepiano

The operation of the piano is based on a complex system of strings stretched over a wooden or metal structure. When a key is pressed, a felt-coated hammer is triggered, striking the corresponding string and producing sound. The vibration of the strings is amplified by the soundboard, a crucial component for the richness and resonance of the piano sound. This mechanism, although apparently simple, is the result of centuries of technical development and refinement.

The main components of the piano are fundamental to its operation and sound quality. These components and their functions are described below:

- Keyboard: The piano keyboard usually consists of 88 keys, which include 52 white keys and 36 black keys. Each key is connected to a hammer that, when pressed, strikes a specific string. The piano keyboard is nothing more than a lever system, that is, a piece of wood (key), two pins (one for vertical fixation – balance – and the other for horizontal fixation – positioning). Figure 2 schematically shows the mechanism of a piano key.

Figure 2: Keyboard of a grand piano

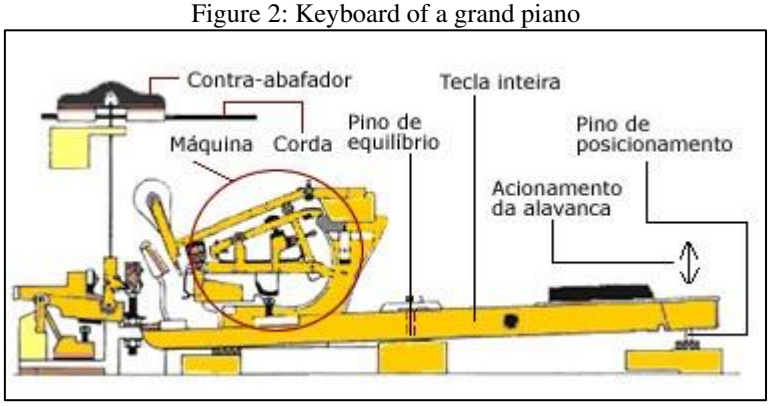

Fonte https://www.salaomusical.com/pt/content/17-historia-do-piano

- Hammers: Made of wood and coated with felt, hammers are responsible for striking the strings and producing sound. The quality of the felt and the precision of the mechanism are crucial to the dynamics and timbre of the piano. The hammer, after striking the string, returns to its position due to the effect of gravity, because the piano is positioned horizontally. In the case of the present project, as the piano will be played in an upright position, this mechanism had to be changed using springs so that the hammer returns to its original position after hitting the string. Without this modification, the piano simply wouldn't play.
- Strings: Piano strings are made of steel and vary in length and thickness to produce different tones. Thicker, longer strings produce lower notes, while thinner, shorter strings produce high notes.
- Pedals: The piano pedals, usually three (*sustain, una string, and sostenuto*), give the pianist greater control over the sound. The *sustain pedal* prolongs the vibration of the strings, the *una corda* softens the sound, and the *sostenuto* sustains certain notes while others are played normally.

To develop a device that will support the piano, it is important to know the main structural elements of a grand piano. Figure 3 shows each of them.

Figure 3: Structural components of a grand piano

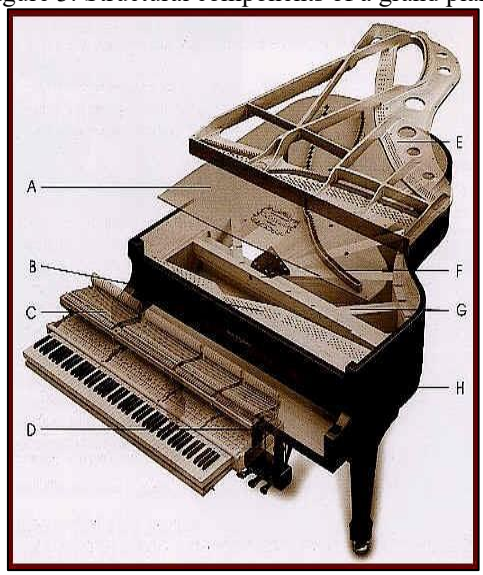

Source: https://www.salaomusical.com/pt/content/17-historia-do-piano

- A - Soundboard: Also known as a soundboard, usually made of spruce wood, it amplifies the vibrations of the strings, giving the piano its rich and full sound. It is essential for the acoustic quality of the instrument.
- B - Stump: The stump is the part of wood where the tuning pegs (tuning pins) are inserted. It is crucial for maintaining the piano's tuning, as the tuning pegs are adjusted to tension or relax the strings.
- C - Mechanism: The piano mechanism, also known as the "piano action", is the set of parts that translates the movement of the keys into sound. This mechanism is composed of several interconnected parts that guarantee the precision and response desired by the pianist (keys, hammers, repetition springs and other components).
- D - Lyre: The lyre is the structure that supports the piano pedals. In addition to providing a physical support, it transmits the actions of the pedals to the internal mechanism, allowing sound control.
- E - Plate: The plate, usually made of cast iron, is the structure that supports the tension of the strings. It is crucial for the durability and stability of the piano, as the strings exert enormous force. The strings of a piano tuned to the normal tuning fork 440Hz make a tension of about 22 tons at the ends.
- F - Bridge: Easels are pieces of wood that transmit the vibrations of the strings to the soundboard. They are positioned in such a way as to maximize the efficient transmission of vibrations, contributing to the sound richness of the piano.
- G - Beams: Beams are wooden beams that reinforce the structure of the piano. They help to withstand the tension of the strings and maintain the stability of the structure. The weight of a piano, whether upright or grand, is smaller when compared to the pressure to which the

instrument is subjected by the strings. The goal is to create reinforcements in the body of the piano that help it support not only the weight of all the internal components, but also all the great pressure imposed by the strings tuned on the tuning fork. Structural reinforcement is usually made up of solid logs of wood located at the back of the piano. In the following example, structural reinforcement is pointed out. Figure 4 shows the beams used in structural reinforcement.

Figure 4: Structural beams of a grand piano

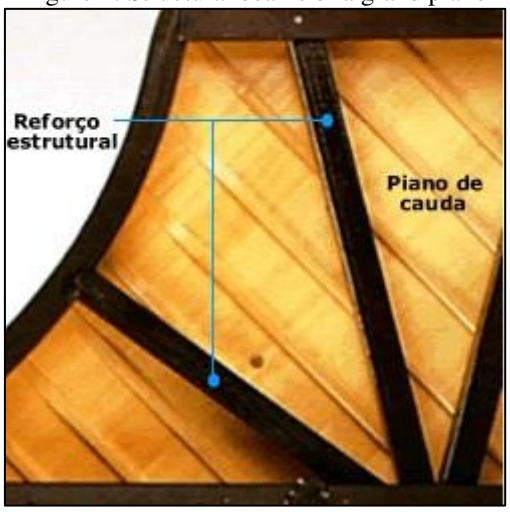

Source: https://www.salaomusical.com/pt/content/17-historia-do-piano

- H - Case: The piano case is the external structure that surrounds and protects all the internal components. It also contributes to acoustic quality by influencing the resonance and timbre of the sound.

Grand pianos, a design element of this work, can come in different sizes, which adapt both to the needs of sound and to the space constraints that are often decisive in the choice of model. It is important to remember that the sound volume and timbre of a piano are related to the length of the strings and the size of the harmonic case, so some models are suitable for smaller environments, while others are ideal for large concert halls.

It is common to talk about full, 1/2 grand and 1/4 grand pianos. Obviously, the difference is in the size of the instruments. But there is no specific measurement standard and each manufacturer has developed unique designs for each model, because the longer the string, the greater the tension required to make it sound correctly, which requires a stronger and heavier structure.

On the other hand, and as a consequence, the instrument has a higher sound volume. Because of this, the so-called full-length grand pianos are the most suitable for concert halls, theaters and other environments where it is necessary to fill the space with their sound. There is also the fact that, in these environments, the piano is often accompanied by orchestras and groups of various

instruments, which requires more volume to balance the sound. The variations in average size are shown in figure 5.

Figure 5: Size variations of a grand piano

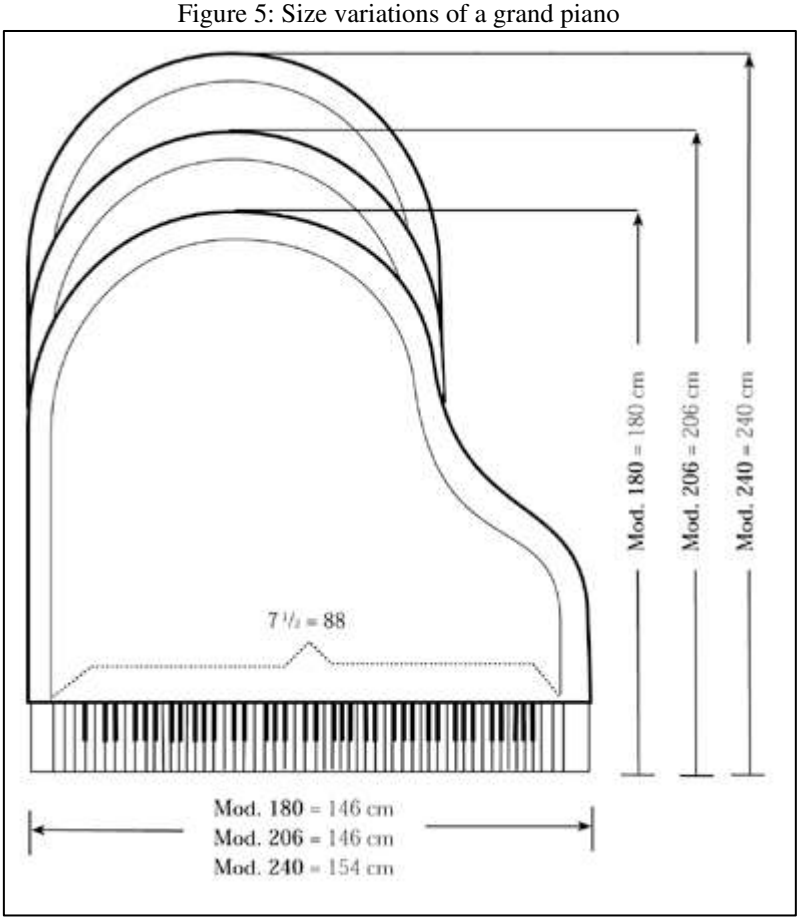

Source https://tienespianos.blogspot.com/2011/08/piano-de-cauda-tamanhos-e-medidas.html

Over the years, the piano has remained a central instrument in music education and performance, adapting to technological and cultural evolutions without losing its essence and importance. Understanding its history, functioning, and components is essential to fully appreciate this instrument that continues to inspire and thrill generations of musicians and music lovers. This project seeks to explore these aspects, offering a different way of appreciating and disseminating this instrument by uniting technology and art

.

MOTIVATION AND PURPOSE

Casa do Piano, located in the Federal District, is a unique company, founded in 1982, with the objective of offering piano maintenance and restoration services, in addition to recreating old pianos. However, due to the passion and ingenuity of its founder, Casa do Piano also seeks to develop innovative projects in the area, including the "Itinerant Museum" and the "Piano for All", which takes a piano for a walk through the heart of Brasília, in Eixão do Lazer (figure 6).

Figure 6: Piano for all (monumental axis of Brasília)



Source: "Piano for all" project. [G1, 2023]

In this sense, the Casa do Piano team sought the Department of Mechanical Engineering of the University of Brasília – UnB, to design a device to hoist a grand piano together with the pianist in order to make presentations with the piano in an upright position. The inspiration came from a performance by Swiss pianist Alain Roche, who uses a similar device in his performances, elevating the piano and the artist in an open-air choreography. In it, a piano and the pianist are suspended by a crane, and the musical performance is performed 10 meters from the ground (figure 7). The pianist also performed at the closing ceremony of the Paris Olympics.

Figure 7: Pianist Alain Roche performing in Sion, Switzerland (2019)



Source: https://www.worldpianonews.com/event/piano-vertical/

The execution of an undertaking of this magnitude presented several challenges in the area of mechanical design and design. It was necessary to design a device that is capable of guaranteeing the suspension of the piano plus the pianist, totaling about 400 kg, without detracting from the design of the piano. In addition, ergonomic and safety aspects have been taken into account in the design of the chair in order to ensure the safety and comfort of the pianist, who must preserve his ability to perform musical pieces while suspended.

The project required an interdisciplinary approach, combining engineering, ergonomics, safety and design expertise, to ensure the technical and artistic feasibility of the device.

To make the project viable, the theme was addressed in the discipline Design of Mechanical Systems, a final course discipline, of the Department of Mechanical Engineering of UnB, and the participating students were divided into two groups. One group was responsible for designing a lifting device for a specific grand piano, provided by Casa do Piano and another group was responsible for developing a lifting device that would be adaptable to different sizes of grand pianos. The responsibility for the coordination, orientation and monitoring of the projects was the responsibility of the professor responsible for the discipline.

PRODUCT

NEEDS

The main need was to develop a robust and safe structure to attach to a grand piano, allowing it to be hoisted vertically by a lifting machine. This structure must guarantee the integrity of both the piano and the pianita as well as the proposed artistic performance, which consists of playing the piano vertically suspended. Safety is the most critical aspect, since the performance will be carried out in a suspended environment, requiring a construction that supports the weight of the piano and the pianist and the movements inherent to the musical performance.

In addition to safety, the structure was designed in such a way as not to interfere with the aesthetics of the piano and the sound quality during the performance. The attachment to the piano must be firm, but discreet, preserving the visual and functional integrity of the instrument.

By meeting these needs, the project sought to provide an innovative solution that allows for a unique artistic performance, highlighting both the musician's skill and the engineering involved in the design of the device.

CONCEPTUAL DESIGN OF THE LIFTING STRUCTURE

Three solution alternatives were evaluated based on technical criteria and submitted to a detailed analysis using a decision matrix.

For each design, factors such as the robustness of the structure, the ease of assembly and disassembly, the adaptability to different lifting scenarios, the lightness to facilitate transport, and the strength and durability of the materials used were taken into account. Initial development included the creation of 3D models, detailed structural calculations and numerical simulations to ensure that all proposed solutions were feasible and effective.

The importance of adopting a structured and comparative approach in the evaluation of different designs lies in the ability to ensure that the final solution not only meets technical requirements, but is also practical and cost-effective. An attempt was made to

optimize the project in terms of safety, reliability and operational efficiency, ensuring that the chosen solution was the best possible for the specific context of the project.

Each of the three solutions adopted is detailed in the subsequent subtopics, providing a comprehensive overview of the alternatives considered and the rationale for choosing the final design used in the piano elevation project.

Design 1

Design 1, shown in figure 8, is based on a through tube that supports the weight of the piano, the pendant, and the lifting frame (containing the chair). The chair is fixed to the metal structure by welding and has a structure with two curved bars that receive vertical forces.

Figure 8: Design 1

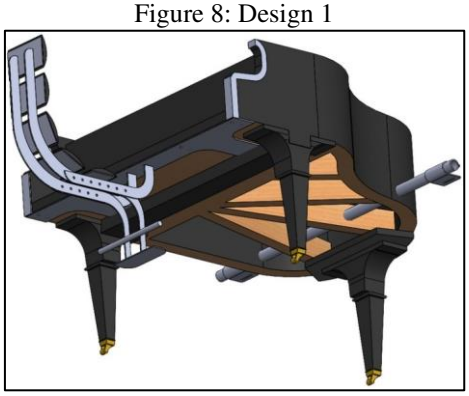

Source: Authors.

This design places high demands on the wooden structure of the piano, which can compromise its integrity, since the structural beams would have to be drilled for the tube to pass. Although the cost and weight are relatively low, the performance, reliability, and safety leave something to be desired.

Safety is the main requirement to be taken into account in the project, and design 1 could present flaws that would compromise the safety of the pianist and the piano.

Design 2

Design 2, shown in figure 9, consists of a structure of metal sheets and rectangular tubes to strengthen the structure.

Figure 9: Design 2

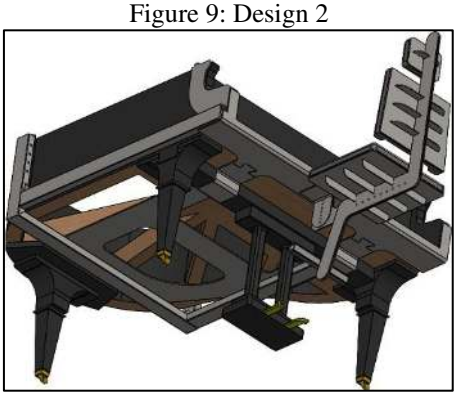

Source: Authors

This design offers increased reliability, performance, and safety. The use of sheet metal and rectangular tubes provides a solid and stable structure, capable of supporting loads safely. The piano frame will not be affected or used to support the full weight during lifting. The chair, being simpler and more ergonomic, guarantees the necessary comfort to the pianist, in addition to facilitating the manufacture and assembly.

The cost of design 2, despite being higher than that of design 1, is justifiable by the additional benefits in terms of safety and reliability. It provides a robust structure that minimizes the risk of failure, ensuring high efficiency in lifting the piano, providing stability and control.

Design 3

Design 3, shown in figure 10, adopts a simpler structure with only a plate cortoning the piano and a curved tube that is attached welded by three clamps to the structural plate.

Some features of this design include: ease of implementation by the use of a single tube. Ease of production since only sheet metal with laser cutting and calendered tube will be used and low cost. As with design 2, the piano frame will not be affected or used to support the full weight during lifting.

Figure 10: Design 3

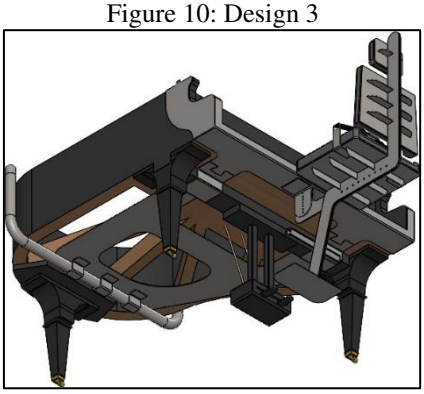

Source: Authors

To select the best design, the method proposed by Robert L. Norton (1999) was used, which is an effective approach to select the best solution when the technical analysis identifies several viable options. The decision matrix facilitates this choice by forcing the designer to consider a wide range of factors systematically. In this matrix, the possible solutions are listed in the first column, while the evaluation parameters are arranged in the top row. Each solution is then evaluated against each parameter, such as cost, ease of operation, efficiency, safety, and reliability, as per the specific needs of the initial problem. These factors are weighted according to their relative importance in the project. For example, in projects carried out in hard-to-reach places, reliability and ease of maintenance may be more important than aesthetics. The scores of each solution for each criterion are recorded in the body of the matrix, using an easy-to-manipulate scale, such as from 0 to 10. Table 1 presents the decision matrix with the criteria adopted for the design of the piano lifting structure.

Table 1: Decision Matrix for the Piano Elevation Project

	Cost	Safety	Visual	Confidence	Total
Weighting factor	0,30	0,35	0,10	0,25	1
Design 1	2,40 8	2,10 6	0,50 5	1,25 5	6,25
Design 2	1,80 6	3,15 9	0,70 7	2,25 9	7,90
Design 3	2,40 8	3,15 9	0,90 9	2,25 9	8,70

Source: Authors

It was decided to select design 3, for the safety, reliability and look that this solution provides. As discussed below, after the completion of the structural analysis, it was decided to use an interissa plate instead of a hollow plate, as shown in figure 10, which allowed to reduce its thickness.

The project was divided into three subsystems, structural plate, chair structure and lifting system.

CONCEPTUAL DESIGN OF THE PIANIST'S CHAIR STRUCTURE

Another key element for the project is the pianist's chair. The structure of the chair, in addition to having to support its own weight and that of the pianist, must contemplate ergonomic aspects, so that the pianist is comfortable during the performance, taking into account that he will be performing vertically. The structure must support the weight of the pianist, which may vary, as well as allow an adjustment in the height of the seat and headrest. It should also provide supports for the pianist's legs and feet, to enable him to properly use the pedals and to rest when he is not performing. In addition, it should be aesthetically and visually discreet, harmonizing with the whole as a whole.

Ergonomic Analysis

For the ergonomic analysis, the CATIA V5 software was used, which has specialized modules for ergonomic simulation. The RULA tool integrated into CATIA V5 was instrumental in identifying and assessing the risks of repetitive strain injuries and poor postures.

To ensure that the design was adaptable to different sizes of pianists, the ergonomic analysis was performed considering the two extremes of size of the individuals available in the *software*: the 100% male percentile and the 0.01% female percentile. This approach ensures that the structure is inclusive and can comfortably accommodate both the largest and smallest pianists possible.

Figure 11 – Ergonomic analysis using CATIA V5 software

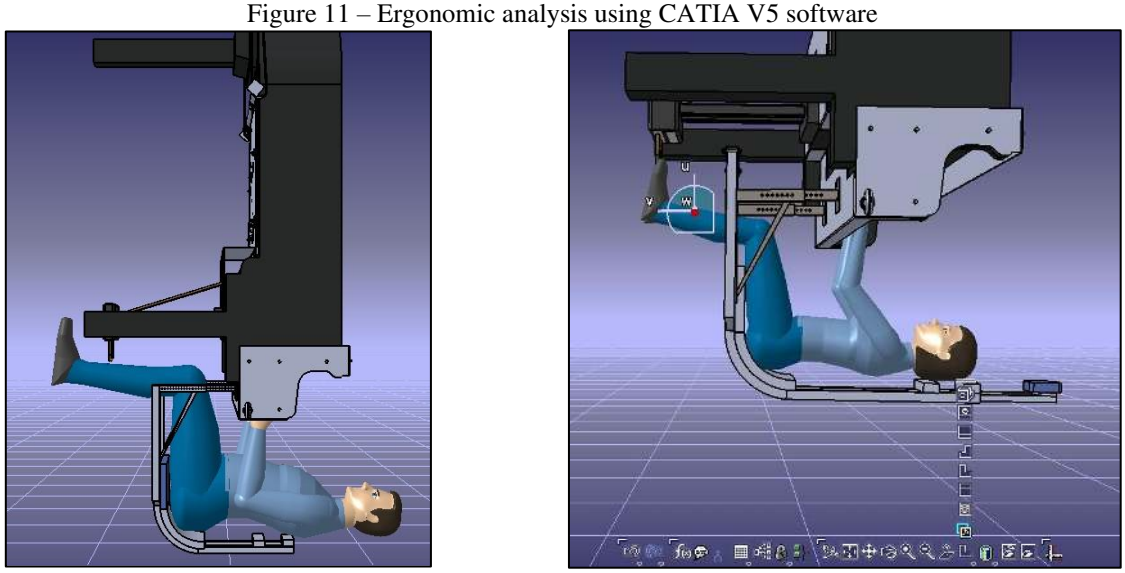

Source: Authors

After analyzing several layout proposals, the solution shown in figure 12 was reached.

Figure 12 – Chair structure with the necessary adjustments. (a) final layout, (b) longitudinal and height adjustment, (c) calf and foot support, and (d) structural reinforcement

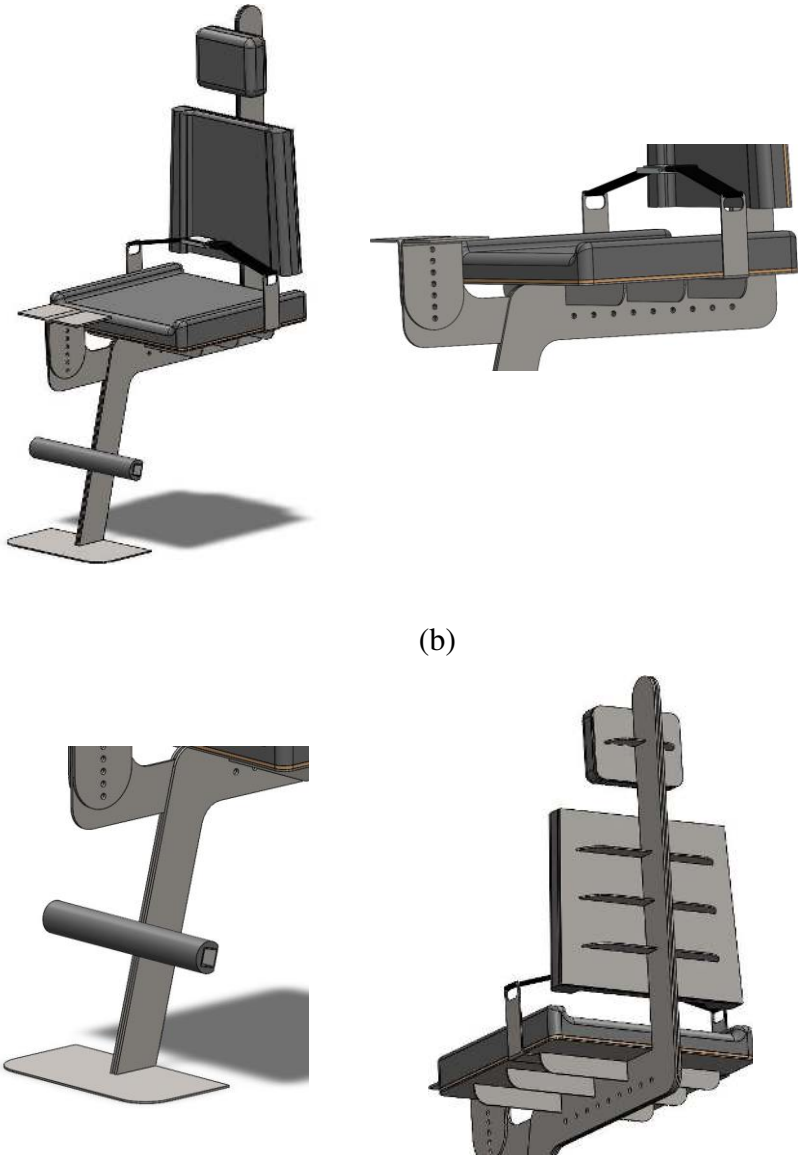

(a) (b)

(c) (d)

Source: Authors

Thinking about the pianist's safety, a two-point buckle seat belt was added, as shown in figure 12 (b), the same used in airplanes. It allows easy adjustment and its safety *clip* can only be released if there is complete opening of the buckle mechanism, allowing greater safety for the pianist. Also, aiming at the safety of the pianist, a ring was welded to the structure of the chair from which a steel cable will come out that will be anchored directly to the hook of the lifting machine. If the chair were to detach from the structure, the pianist would be suspended by the cable.

The manufacture of the chair's upholstery was designed to be simple, comfortable and low cost. There will be three layers .. The first layer is the steel sheet, the structural part of the seat, the

second layer is a 6 mm mdf board, on top of which a layer of foam will be glued together with the fabric that will be stapled to the mdf.

ANALYSIS OF THE STRUCTURAL PLATE USING FINITE EELEMENTS

Figures 13 and 14 show details of the structure of the piano support plate analyzed using finite elements.

Figure 13: Structural plate with the lifting support.

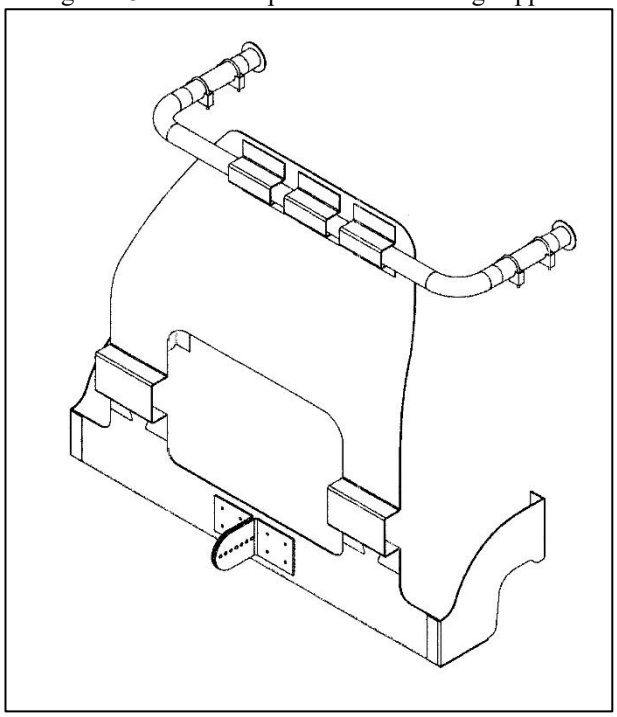

Source: Authors.

Figure 14: Structural plate with the lifting support.

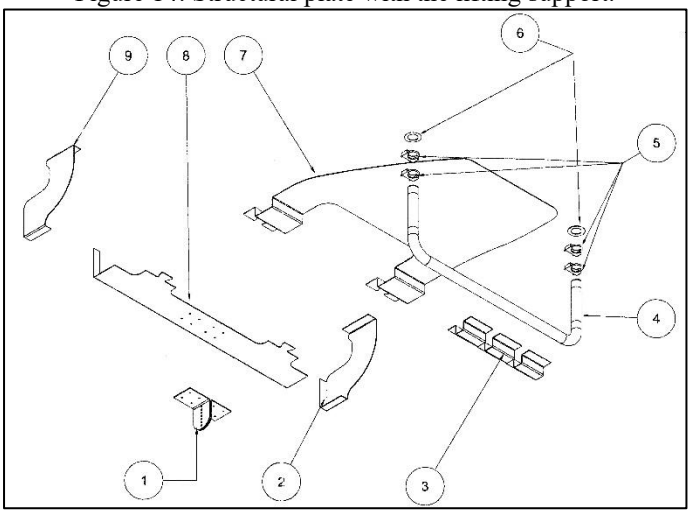

Source: Authors

Figure 18 has the following descriptions:

1 – Chair fixing plate on the structural plate. 1020 steel with 3.18 mm thickness.

2 and 9 – Side plates in 1020 steel with 3.18 mm thickness.

3 – Tube fixing plates to the structural plate. 1020 steel with 3.18 mm thickness.

4 – Steel tube with an external diameter of 55 mm and a wall thickness of 3.0 mm.

5 – Clips for positioning the piano's support cable.

6 – 1020 steel washers, with a thickness of 3.18 mm to be welded at the end of the tube.

7 – Structural plate made of 1020 steel with a thickness of 3.18 mm.

8 - Front support plate, made of 1020 steel with a thickness of 3.18 mm.

The numerical analysis aimed to validate the project developed in 3D CAD. The analysis was done statically using the Ansys R1 2023 software.

The procedure involved the following steps: elaboration of the mesh, establishment of boundary conditions and, finally, critical analysis of the results found.

ELABORATION OF THE MESH

Figure 15 shows details of the mesh used in finite element analysis. In regions close to the holes, the mesh was refined,

Figure 15: Detail of the mesh used in finite element analysis.

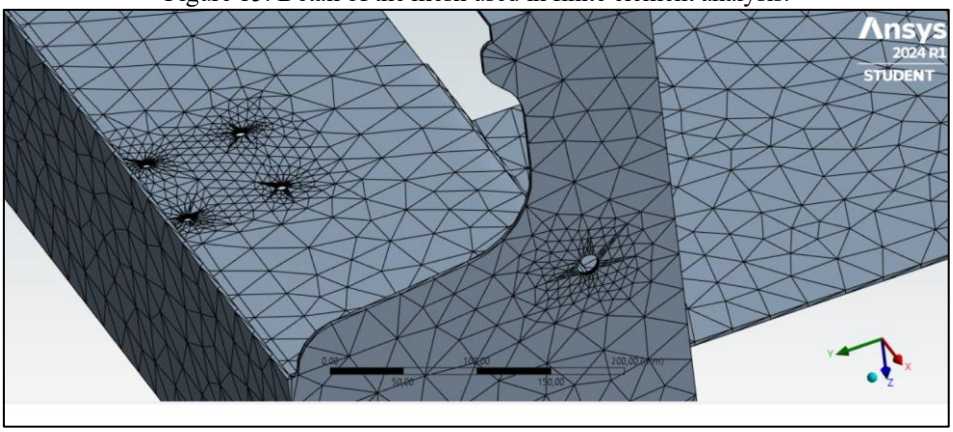

Source: Authors.

BOUNDARY CONDITIONS

The typical condition of use of the structure that will support the piano is in the lifting situation, where the following forces are acted: weight of the piano, weight of the pianist and weight of the structure together with the chair. The total force applied in a distributed way in the model is 4,000 N, with 2,800 N referring to the weight of the piano and 1,200 N referring to the maximum weight of the pianist. The boundary conditions adopted in the structural plate that will support all the elements are shown in figure 16.

Figure 16: Boundary conditions adopted.

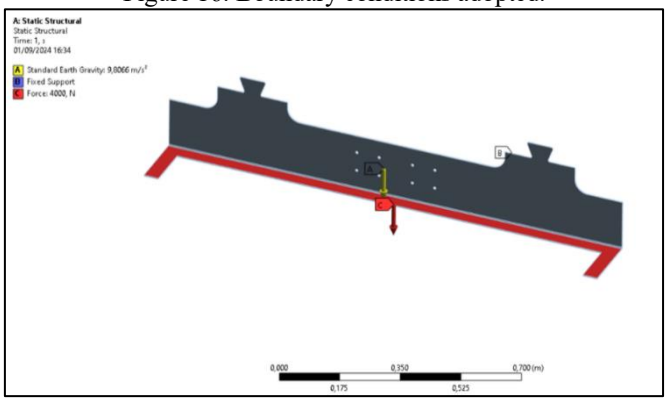

Source: Authors.

RESULTS FOUND IN THE SIMULATION

The material used in the analyses was SAE 1020 HR steel (hot rolled) with tensile strength of 380 MPa and yield strength of 210 MPa (Budynas, 2016). This steel was used because it is the most common and, therefore, is easy to acquire.

Figure 17 shows the maximum stresses that will act on the structural plate. The maximum value found was 168 MPa in the region shown in figure 18, a value below the yield limit of the material used in the analysis.

Figure 17: Result of the stresses found in the structure

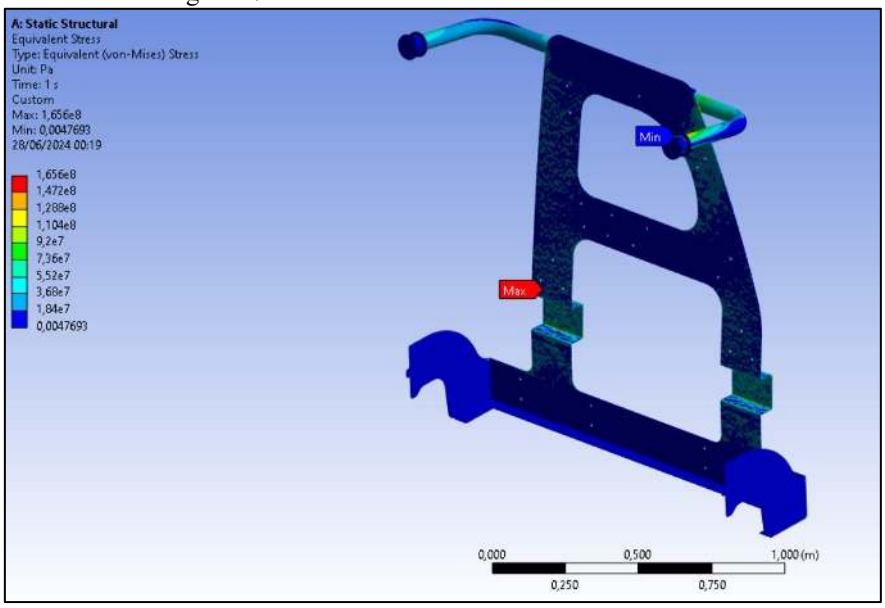

Source: Authors.

Figure 18: Location of the maximum achievable stress in the structure.

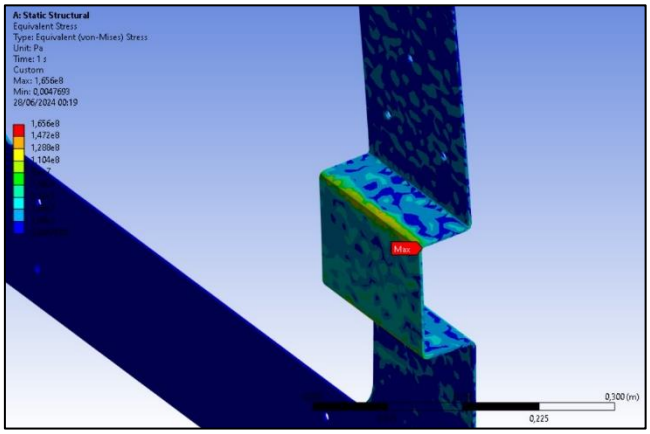

Source: Authors.

ANALYSIS OF CHAIR STRUCTURE USING FINITE ELEMENTS

Figures 19 and 20 show details of the structure of the chair analyzed using finite elements.

Figure 19: Chair frame

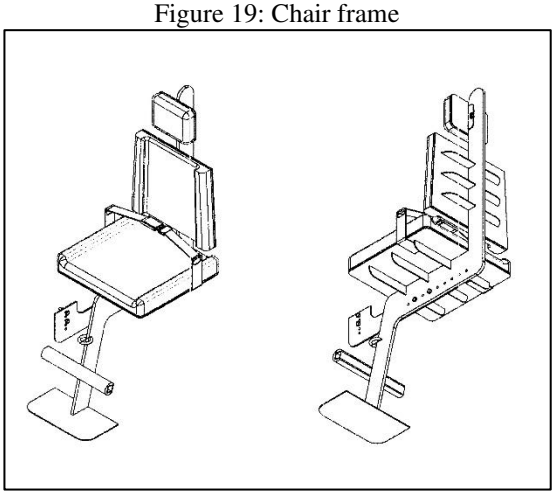

Source: Authors

Figure 20: Splendid view showing details of the chair elements

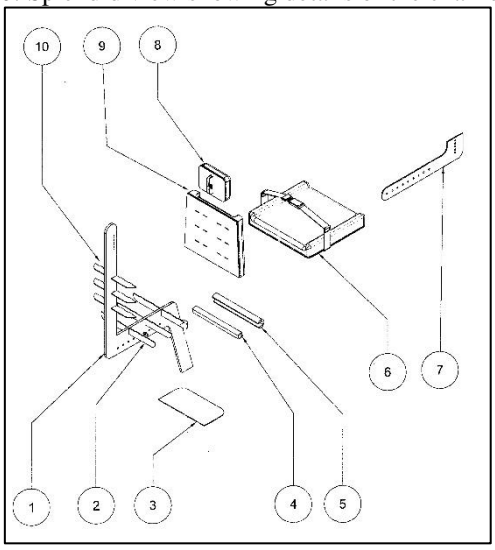

Source: Authors

Figure 20 has the following descriptions:

1 – Central structure of the chair in 1020 steel sheet with a thickness of 12.70 mm;

2 and 10 – Chair backrest and seat reinforcement plates, 1020 steel plate with 3.18 mm thick.

3 – Footrest plate. 1020 steel sheet with 3.18 mm thickness.

4 and 5 – Calf support structure. Metalon 30x30x2 mm in 1020 steel.

6 – Chair seat made of 1020 steel sheet with 3.18 mm thickness, mdf with 6 mm thick, covered by a layer of foam and fabric.

7 – Connection plate between the chair and the structural plate. 1020 steel with 4.75 mm thickness.

8 and 9 – Head and back restraints, respectively, made of 1020 steel plate with 3.18mm thick, 6mm thick MDF, covered by a layer of foam and fabric.

The analysis carried out on the bank's structure took into account the accommodation of a person with a maximum weight of 160 kg. The results referring to the general deformation of the structure and the distribution of stresses are presented in figures 21 and 22, respectively. The results showed, respectively, that the minimum safety factor found was 1.75, the maximum strain was less than 1.0 mm and the stresses found are below the yield stresses of the material used in the analysis. With these results, it can be considered that the dimensions of the chair (sheet thicknesses and geometry) are adequate for the intended use.

Figure 21: Maximum stress at the critical point of the chair frame

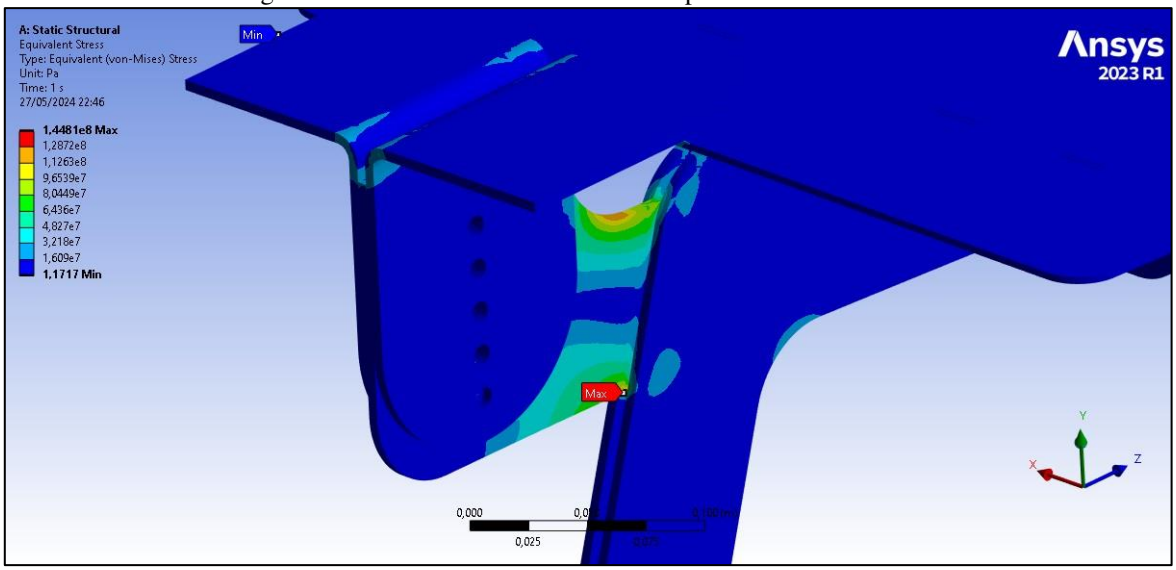

Source: Authors

Figure 22: Deformations in the chair structure

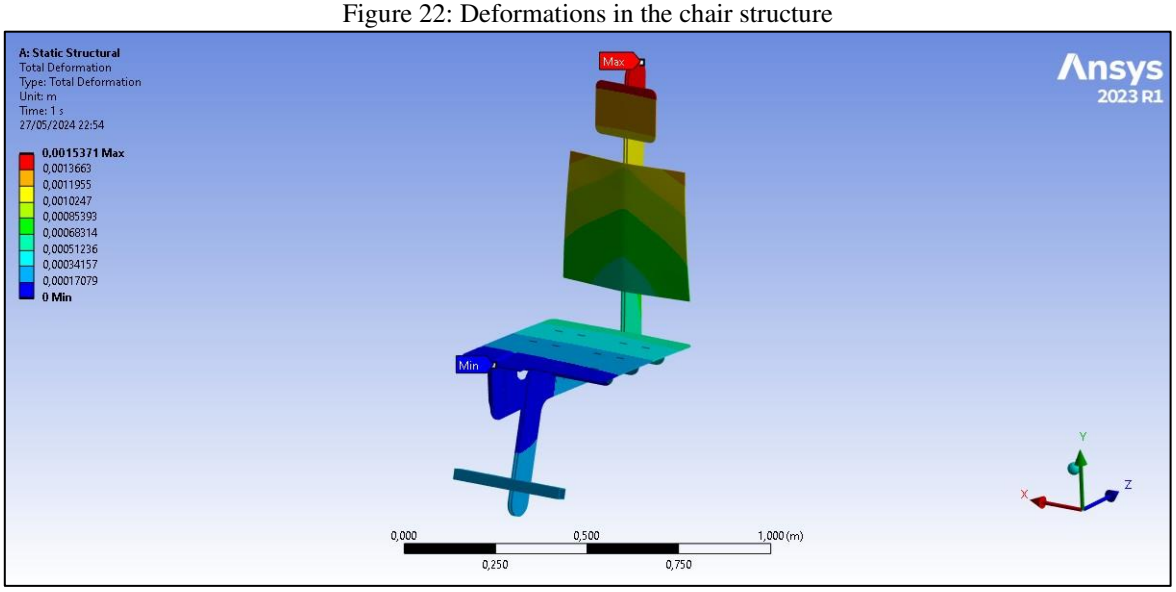

Source: Authors

SELECTION OF LIFTING ELEMENTS

To lift the piano with the pianist, the appropriate elements were selected, which guarantee safety and efficiency throughout the operation. According to the ABNT NBR 15.637-1:2017 (version corrected in 2021) and ABNT NBR ISO 9001:2015 standards, the team must use appropriate equipment for lifting, such as lifting straps and shackles. These materials must have identification labels that contain information about the length, capacity in tons, safety factor, name of the manufacturer, type of material and capacities in different forms of use.

The lifting strap selected was the Sling Type manufactured by BUDIN TOOLS in 100% Polyester, according to the NBR-15637 Standard, having the following characteristics: For the piano and pianist lifting project, the choice of the strap is a crucial factor to ensure safety and efficiency. We chose to use the yellow Sling Type Lifting Strap manufactured by Budim Tools in 100% Polyester, according to the NBR-15637 Standard, having the following properties: the maximum working load is 3 tons, width 90 mm, 3 m long, safety factor 7:1 and weight of 0.655 kg/m. This strap is ideal for replacing steel cables and chains in situations that require greater flexibility, adjustment and care of the transported material.

The Spreader Beam was also selected, which is an essential device for lifting operations that require the uniform distribution of the load weight. It consists of a long bar that keeps two straps separate, distributing the weight over two or more attachment points. This equipment is essential to improve stability, safety and accuracy during the lifting of heavy loads and irregular shapes.

Figure 23 shows a scheme using this type of load lifting.

Figure 23: Load lifting using a Spreader Beam.

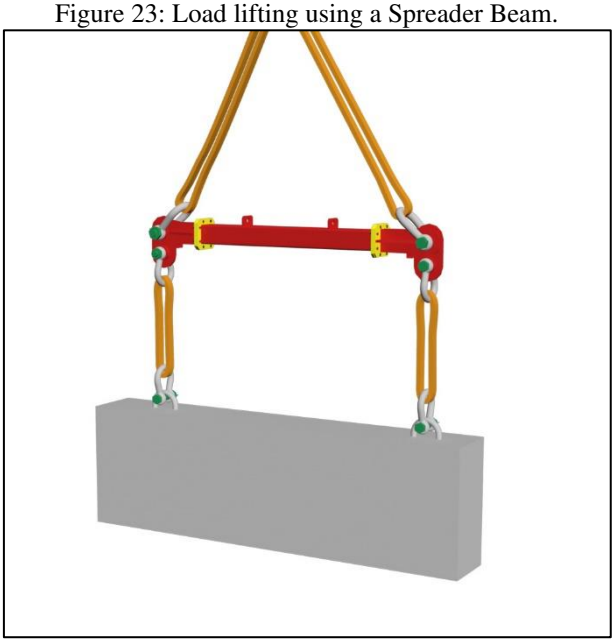

Source; Authors.

A two-pronged aviation seat belt with quick release technology was also selected to secure the pianist while hoisting the piano, which offers numerous benefits. These include superior safety, ease of use, comfort, compliance with stringent regulations, versatility and proven reliability. Integrating this belt into the lifting process not only increases the safety of the pianist but also contributes to the efficiency and success of the operation, ensuring a smooth and safe experience for everyone involved.

In addition to the seat belt attached to the chair frame, the pianist will use a climbing chair, anchored directly to the hook of the lifting machine by means of a steel cable, providing an extra layer of safety. The climbing chair, which can be seen in figure 24, is ideal for the safety of the pianist in the event of a failure of the chair structure. Made of high-strength materials such as nylon and polyester, the car seat distributes weight evenly, reducing the risk of discomfort or injury. In addition, it has multiple adjustment points, ensuring a comfortable and secure fit for different body sizes and shapes, even over long periods of use.

Figure 24: Chair used in climbing

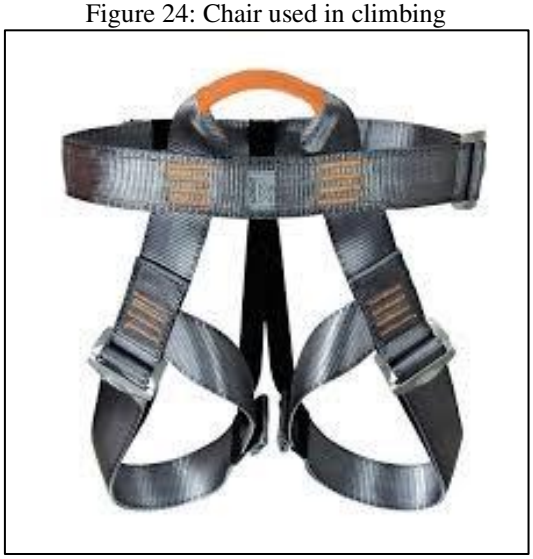

Source: Alpimonte Escalada, 2024

CONCLUSIONS

The proposed project presented challenges in both the arts and engineering domains. From the perspective of the teams involved in the process, overcoming the various obstacles that arose during the development of the device brought an immense range of knowledge and engineering techniques, which enriched the training of the students involved.

The first challenge to be overcome was to develop a structure that would be able to surround and support the piano, whose unique geometry presented particularities to be overcome. Another issue to be overcome was the attachment of this structure to the piano, so that the instrument itself would not be altered or modified, ensuring safety and harmonization during performances. Several design alternatives were analyzed and one of them was selected using the decision matrix technique. Subsequently, using the finite element method, the structural plate was designed in order to ensure the safety of the system and at the same time, minimizing its weight. The results found allow us to affirm that the structural plate will safely withstand the forces present during the elevation of the device together with the piano and the pianist. The final weight of the structural plate was estimated at 60 kg.

Another key point for the project was the choice of the bench, which in addition to supporting the pianist, must have the ergonomic and dimensional characteristics necessary to allow an adequate performance. To ensure this functionality, simulations of seat ergonomics were performed using the CATIA V5 software for different profiles of pianists.

The chair's structure was also designed using finite elements. In the same way as the structural plate, the chair structure was designed to ensure the safety of the system while minimizing its weight. The results found allow us to affirm that the chair will safely support the efforts present during the elevation of the device together with the piano and the pianist. The final weight of the chair was estimated at 40 kg.

Next, the safety and manufacturing requirements of the device were analyzed. Thus, the various safety systems to be used were detailed, such as the seat belt and the climber's chair anchored, by means of a steel cable, directly to the winch that will lift the piano together with the pianist. If the chair happens to detach from the structural plate, this system will allow the pianist to be suspended by the hook anchored to the lifting machine.

At the end, the manufacturing drawings were prepared, which were made available to the Casa do Piano. The prototype of the device is in the process of being manufactured and it is planned to be tested at the University of Brasilia in October and November 2024 to be put into the field by the end of 2024.

The device is part of an artistic and innovative project, which invites the public to rethink the limits of artistic performances. Also in the context of the university-society interest, the importance of innovation and creativity is noted, which, combined with the scientific method and the engineering process, enable the creation of unique and challenging products.

Figure 25 shows several views of the projected device (structural plate and chair) integrated into the piano.

Figure 25: Views of the projected device integrated into the piano.

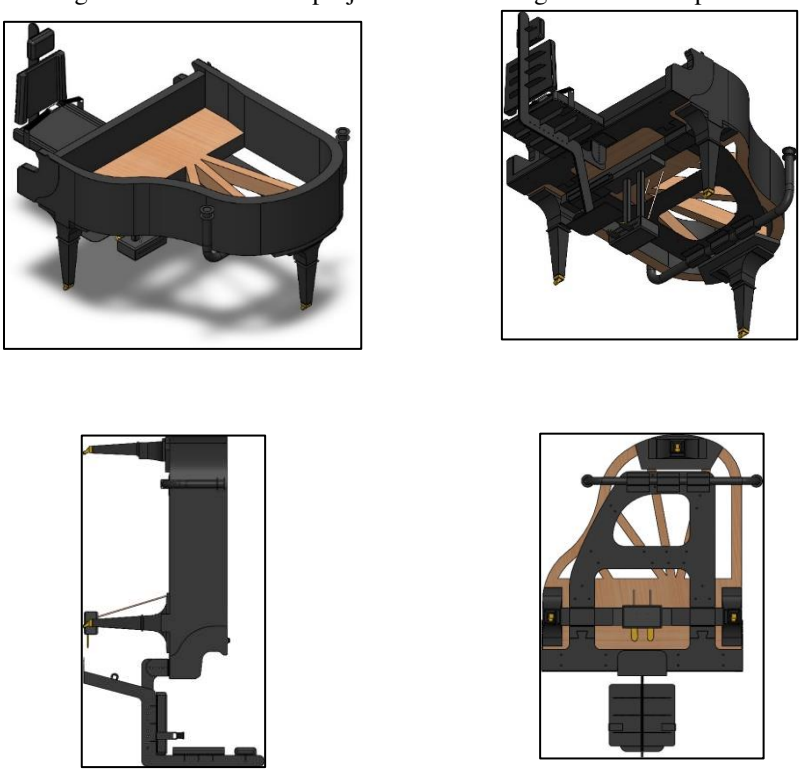

Source: Authors.

REFERENCES

ABNT NBR 15637-1-2017 (versão corrigida 15/03/2021). Cintas Têxteis para Elevação de Cargas - Parte 1 - Cintas Planas Manufaturadas, com fitas tecidas com fios sintéticos de alta tenacidade formados por multifilamentos.

Alpimonte. (n.d.). Cadeira basic club confort escalada rapel e aventura Alpimonte. Available at: https://www.alpimonte.net/cadeirinhas/rapel-e-escalada/6009b375badfb, accessed on June 3, 2024.

Budynas, R. G., & Nisbett, J. K. (2016). Elementos de Máquinas de Shigley (10th ed.). Porto Alegre: AMGH Editora Ltda. ISBN 9788580555547.

Crombie, D. (n.d.). Word Piano News, Piano Vertical, Uma performance como nenhuma outra! Available at: https://www.worldpianonews.com/event/piano-vertical

Fortepiano. (n.d.). In Wikipedia: The free encyclopedia. Available at: https://pt.wikipedia.org/wiki/Fortepiano, accessed on May 2, 2024.

G1 DF & TV Globo. (2023). Um piano de 400 kg, puxado por uma bicicleta, leva música às ruas de Brasília [Video]. Available at: https://g1.globo.com/df/distrito-federal/noticia/2023/09/24/video-um-piano-de-400-kg-puxado-por-uma-bicicleta-leva-musica-as-ruas-de-brasilia.ghtml, accessed on May 2, 2024.

Salão Musical de Lisboa. (n.d.). História do piano, a evolução do piano. Available at: https://www.salaomusical.com/pt/content/17-historia-do-piano, accessed on May 2, 2024.

Tienes Piano Ltda. (2011). Available at: https://tienespianos.blogspot.com/2011/08/piano-de-cauda-tamanhos-e-medidas.html, accessed on May 2, 2024.